SPARE PARTS LIST

MODEL NO. 6822

ITEM	PART NO.	DESCRIPTION	QTY	NOTE
001	784211-2	PHILLIPS INSERT BIT 2-25	1	
002	**********	**********	***	**********
003	151561-4	LOCATOR COMPLETE	1	
004	421631-6	DUST SEAL RING	1	
005	213373-4	O RING 22	1	
006	416756-9	LOCK RING	1	
007	**********	**********	***	**********
008	911173-3	PAN HEAD SCREW M4X45	3	
009	151562-2	GEAR HOUSING COMPLETE	1	
010	421392-8	RING 20	1	
011	232050-9	LEAF SPRING	1	
012	216001-0	STEEL BALL 3.5	1	
013	223107-7	SPINDLE	1	
014	233126-5	COMPRESSION SPRING 6	1	
015	**********	**********	***	**********
016	226444-8	HELICAL GEAR 46	1	
017	**********	**********	***	**********
018	**********	**********	***	**********
019	**********	**********	***	**********
020	253192-6	FLAT WASHER 14	1	
021	211031-6	BALL BEARING 608LLB	1	
022	511768-8	ARMATURE ASS'Y 220V	1	
		INC. 21,23,24		
023	681614-0	INSULATION WASHER	1	
024	**********	**********	***	**********
025	253192-6	FLAT WASHER 14	1	
026	410923-8	BAFFLE PLATE	1	
027	639306-5	FIELD 220V	1	
028	911581-8	PAN HEAD SCREW M4X55	2	
029	343407-0	HOOK	1	
030	851360-1	NAME PLATE 6822	1	
031	157725-8	MOTOR HOUSING	1	
032	191950-1	CARBON BRUSH CB-415	1	
033	911124-6	PAN HEAD SCREW M4X14	1	
034	645253-0	NOISE SUPPRESSOR	1	
035	651256-4	SWITCH SGEL106CV-1A	1	
036	411852-8	SWITCH COVER	1	
037	155995-3	HANDLE COVER	1	
038	911153-9	PAN HEAD SCREW M4X28	3	
039	651478-6	SWITCH VTX11	1	
040	911133-5	PAN HEAD SCREW M4X18	2	
041	687001-1	STRAIN RELIEF	1	
042	666071-3	POWER SUPPLY CORD 1.00-2-5.0	1	
043	682559-5	CORD GUARD 8	1	
044	421795-6	SEAL RING	1	
E04	654051-1	EARTH TERMINAL	1	

SERVICE DRAWING
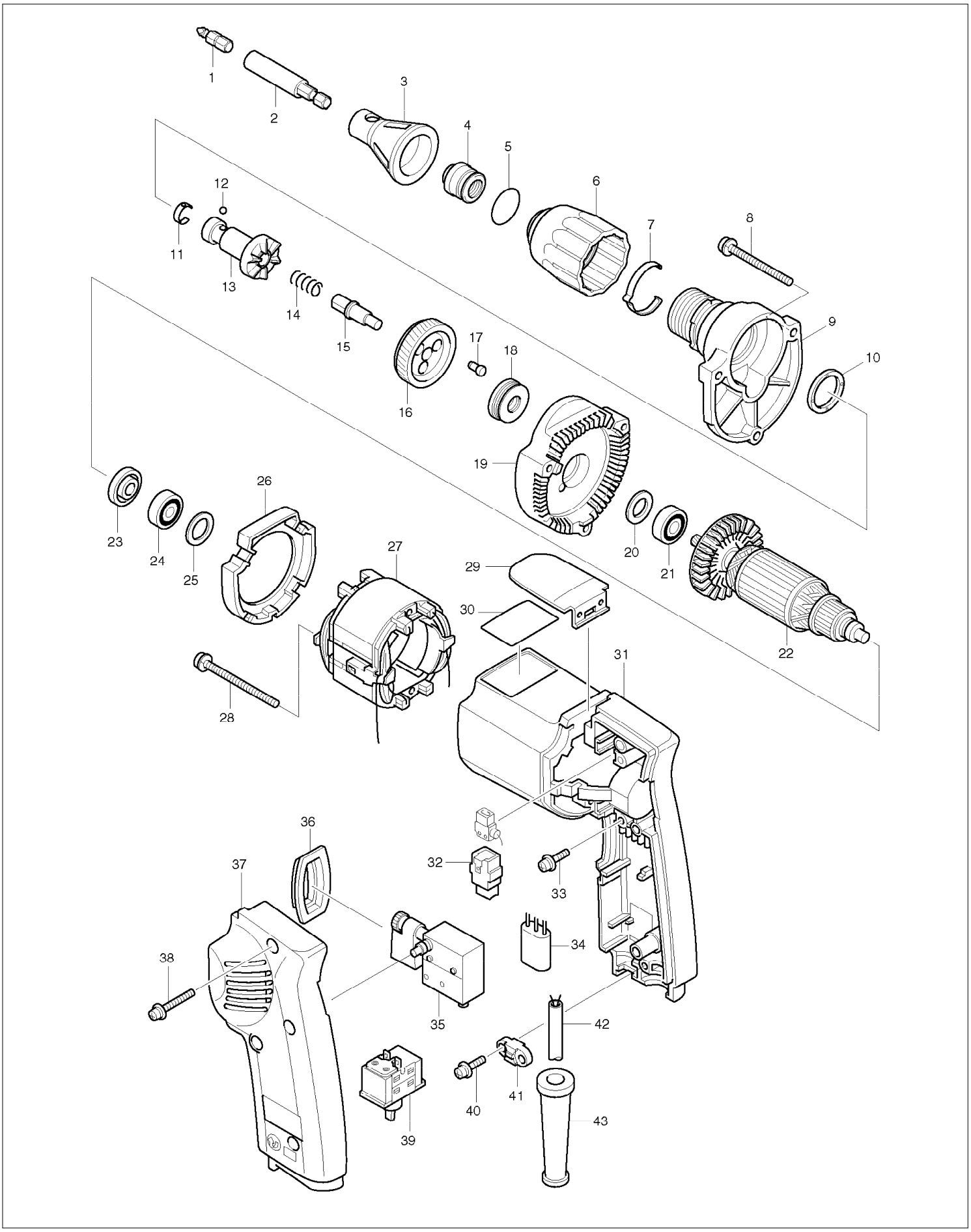
MODEL NO. 6822